16CH[illegible]

PM16C-04XD

[illegible]

[illegible]

[illegible] 2658,2659 ([illegible] 11[illegible]

APPLICATION OF ELECTRONIC DEVICES

[illegible]

[illegible] 300-0013 [illegible] 3739
TEL. 029-832-3031([illegible]) FAX. 029-832-2662
URL http://www.tsujicon.jp/
E-mail info2@suji-denshi.co.jp

□　□

1□□　□ ―――― 1

1)　□□ ―――― 1

2)　□□□□□□□□□ ―――― 2

3)　□□□□□ ―――― 2

□□□□□□□□　□□□□ ―――― 3

□□□□□□ ―――― 5

3.1　□□□□ ―――― 5

3.2　□□□□□□ ―――― 5

3.3　□□□□□□□□□ ―――― 7

□□□□□□□　□□ ―――― 8

□□□　P1 □□□□□□□□□□□□□□ ―――― 8

□□□　□□ □□□□□□□ ―――― 9

□□□　P3 □REL,ABS,SCAN□□□□□ ―――― 10

□□□　P4 □□□□□□□□□□□ ―――― 10

□□□　P5 □Timing Out □□ ―――― 11

□□□　P6 □RS-232C□□□□□□□ ―――― 12

□□□　P7 □GP-IB□□ ADDRESS□□□ ―――― 13

□□□　P8 □LCD□□□□□□□□□□□□□□□□□ ―――― 13

□□□　P9 :LAN□□ IP ADDRESS,PORT NO.□□□ ―――― 14

□□□□□□ ―――― 15

□□□　□□□□□□□□ ―――― 15

□□□　PM16C-04XD□□□□□□□ ―――― 16

□□□□□□□□□□□□□□□□□□ 16

□□□　Timing Out□□□□□□□□□□□□□ ―――― 17

□□□□□□□□□□□ ―――― 17

□□□□□□□□□□□ ―――― 18

□□□　□□□□□□□□□□□□□□□□□□□□□□□□□□□□ ―――― 19

□□□　□□□□□□□□□□□□□□ ―――― 20

□□□　H.P□□□□□□□□□ ―――― 21

□□□□□□ ―――― 21

□□□□□□□□□□ ―――― 22

□□　□□□□□ ―――― 25

□□□　□□□□□□□ ―――― 25

□□□　□□□□□□□□□ ―――― 26

□□　□□□□□ □□□ Rate □□□□ ―――― 27

□□　□□□□□ ―――― 28

PM16C04X [illegible]

[illegible]

[illegible] — [illegible] D [illegible] — [illegible] — [illegible] — [illegible] — [illegible]
[illegible]
[illegible] — [illegible]

① [illegible]
[illegible] — [illegible]
[illegible] — [illegible] — [illegible]

② [illegible]
[illegible] — [illegible]

③ [illegible] ms/ [illegible]
[illegible] — [illegible] / [illegible]

④ [illegible]

⑤ CH0 [illegible] CH15 [illegible]

⑥ [illegible]
[illegible]
[illegible]

⑦ [illegible]

⑧ IP ADDRESS [illegible] PM16C [illegible]

⑨ [illegible]

⑩ [illegible]
[illegible] — [illegible]

[illegible]

[illegible]

[illegible]

① [illegible]
[illegible]

② [illegible]

③ [illegible]
[illegible]

④ [illegible]
[illegible]
[illegible]
[illegible]
[illegible]

[illegible]

⑤ [illegible]

[illegible]

⑥ [illegible]

[illegible] − [illegible]

[illegible]

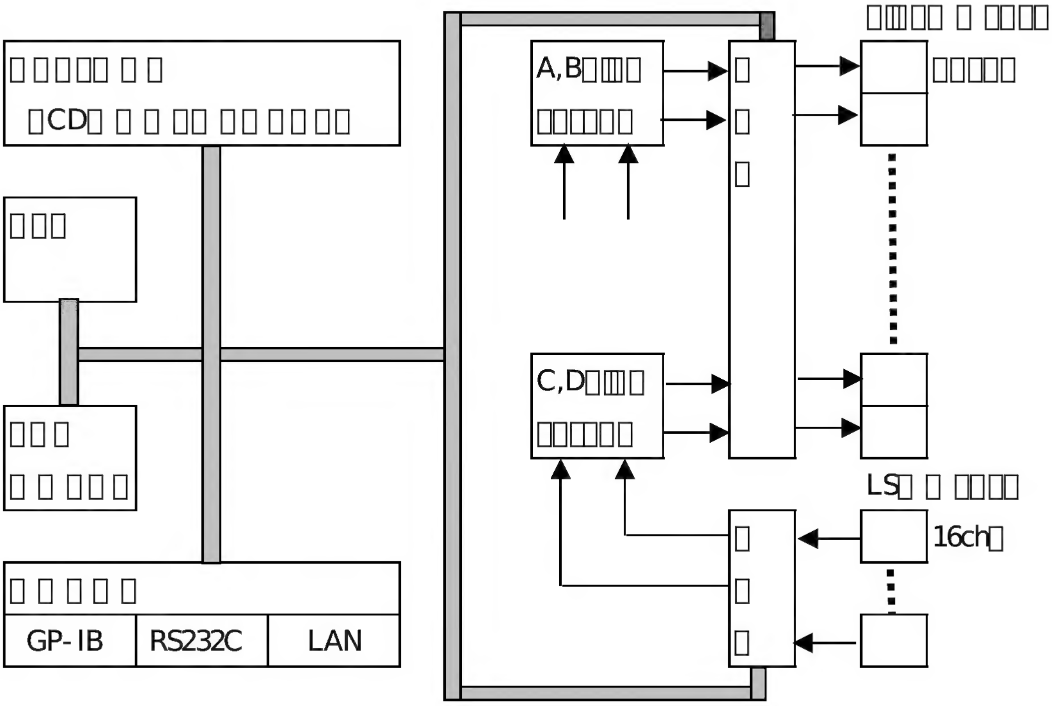

[illegible]

[illegible] GP-IB [illegible] RS232C [illegible]

[illegible]

□□ □□□□□□ □□□□

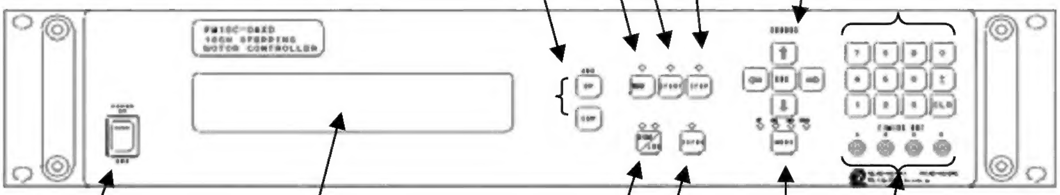

LCD□ □ □ □ □ □□□ 40□ □ × 4□ □ □ □ □ □ □ □ □ □ □ □□□
□□ □ □ □ □ □ □□ □ □ □□ □ □ □ □ □□□ □ □ □□□□ □ □ □
□ □□□□ □ □ □ □ □ □ □ □ □ □ □□□ □

```
*CH01*      |*CH02*  -0|*CH03*  +2| CH03      |
□00100000|900000000|100000000|-98000000|
←←   H      |      M   →→|     L   →→|      M      |
 00111111|  10000000|-5111111K|  10000000|
```

□ □	□ □ □	□ □
①	POWER □□□□	□ □ □ □ □ □ON/OFF□□□ □
②	LCD□ □	□□□ □ × □□ □ □ □ LCD□ □ □□ □ □ □□ □ □ □ □□□ □
③	REM/LOC □ □ □□□□□	REMOTE□ □ / LOCAL□ □ □ □ □ □□□□□ □ □ □ □ □ □ REM ≫LOC ≫REM □□ □ □ □ □□ □ □□□ □
④	SET UP □□□□	LOCAL□ □ □□ □ □ □ □ □ □□□ □ □□□ □ □ □ □ □□ □ □ □ □ □ □ □ □ □ □ □□□ □
⑤	JOG□ □□□ CW,CCW	JOG□ □ CW,CCW□ □ □ □ □ □□□ □ □ □ □□ □ □ □□ □ JOG□□□□ □ □ □□□□□ □ □ □ □□ □ □□□ □ □ □ □□□ □ □ □ SETUP□ □ □□ □ □ □ □ □SETUP□ □ □ □ □ □□ □ □□□ □ □ □ □
⑥	PRESET□ □□□	MODE□ □ □□□□ SCAN□ □ □ □ □□ □ □□ □ □ □□□ □ □ □□ □□□ □LCD□ □ □ □ □ □□PRESET□□□□ □ □□□□□ □ □ □ □ □ □ □ □ □
⑦	START□□□□	□ □□ □□ □ □□ □ □ □ □ □ □□ □ □ □□□ □□ □ □□ □ □□□ □
⑧	STOP□□□□	□ □□ □□ □ □□ □ □ □ □ □ □□ □ □ □ □ □□ □ □□ □
⑨	□ □ □□ □□ □□□□	→ ← ↑ ↓ □ □ □ □ □ □□□LCD□ □ □ □ □□ □ □ □□ □ □□ □ □ □ CHG □ □ □ □□□ □ □ □ □□ □ □ □□ □ □□ □
⑩	□ □ □ □ □ □	□ □ □ □ □ □ 0 □ 9 □ □ □ □ □ □ ± □ □ □□□□ □ □ CLR

		[illegible] NO [illegible] ± [illegible] NO [illegible] CLR [illegible] NO [illegible] [illegible]
[illegible]	MODE [illegible]	[illegible] H.P ≫ REL ≫ ABS ≫ SCAN ≫ H.P [illegible]
[illegible]	Timing Out [illegible]	[illegible] 5.2 Timing Out [illegible]

[illegible]

[illegible]

****
*   PM16C-04X PULSE MOTOR CONTROLLER   *
*   SoftWare Ver 1.00 *
*************** TSUJI-DENSHI Co.LTD,****

[illegible] 3 [illegible]

[illegible]

[illegible]

[illegible]

[illegible]

[illegible]

[illegible]

CH0 [illegible]

	[illegible]	[illegible]	[illegible]	[illegible]
①	*CH01*	*CH02* -0	*CH03* +2	CH03
②	[illegible] 00100000	9000000000	1000000000	-980000000
③	←← H	M →→	L →→	M
④	00111111	100000000	-5111111K	10000000

[illegible] (arrow to ② CH03)

[illegible] 5 [illegible]

[illegible] (arrow to ③ CH02 →)

[illegible] (arrow to ③ H)

[illegible] (arrow to ③ ←)

[illegible]	[illegible]	[illegible]
① [illegible] No. [illegible]	00 [illegible] 15	[illegible] [illegible] ± [illegible] No. [illegible] CLR [illegible] No. [illegible]

		□No.□
		□ No.
		□
① □No.□	_CH01_	CHG □
OR □	_:□	□>>□>>Timing Out Ready>>
OR Timing Out Ready	*CH01*	□
□	*:□	□ Timing Out Ready□
	#CH01#	□ [□] □
	#:Timig Out	□
	Ready	Timing Out Ready □
		□
		□
		□5.2timing Out□
		□
② □	MAX	□
	± 2,147,483,647	□5.1PM16C-04X□
③ □	H□	CHG □
	M□	□STEUP□
	L□	
④ □	MAX	□MODE□
□	± 99,999,999	□
		□5.3PM16C-04X□

□

①	*	C	H	0	1	*				|	*	C	H	0	2	*		-	0	|	*	C	H	0	3	*		+	2	|		C	H	0	3				|
②	□	0	0	1	0	0	0	0	0	|	9	0	0	0	0	0	0	0	0	0	|	1	0	0	0	0	0	0	0	0	|	-	9	8	0	0	0	0	0	0	|
③	□	←		□	H	□			□	|					M			→	→	|					L			→	→	|					M					|
④		0	0	1	1	1	1	1	1	|		1	0	0	0	0	0	0	0	0	|	-	5	1	1	1	1	1	1	K	|		1	0	0	0	0	0	0	0	0	|

CW□ ON

□

H.P□ ON

CCW□ ON

CW,CCW□ [□] □SETUP□ "ON"
□ "ON" □ "OR" □

[illegible]

PM16C-04X [illegible] MODE [illegible]

[illegible]

[illegible] H.P [illegible] [illegible]

[illegible] H.P [illegible]

[illegible] REL [illegible] [illegible]

START [illegible] CW,CCW [illegible] 1 [illegible]

[illegible]

[illegible] ,STOP [illegible]

[illegible] ABS [illegible] [illegible]

START [illegible]

[illegible] ,STOP [illegible]

[illegible] SCAN [illegible] CW,CCW [illegible]

START [illegible] CW,CCW [illegible]

[illegible] ,STOP [illegible]

[illegible]

[illegible] ④ [illegible]

[illegible]

[illegible]

[illegible] ± [illegible]

[illegible] CLR [illegible]

[illegible]

[illegible]

[illegible] − [illegible] ± [illegible]

[illegible]

[illegible] LCD [illegible]

[illegible]

[illegible]

[illegible] SETUP [illegible]

□□ SETUP □□

□□□□□□□□ □□□

□□□□□□□□□□□□□□□□

SETUP□□□P1□P8□□□□□□□□□□□□□□□□□ JOG□□□□□□□□□□□□□□

CW	SETUP□□□□□□□□□□□□□□□	Page Up
CCW	SETUP□□□□□□□□□□□□□	Page Down

□□□ P1 □□□□□□□□□□□□□□□□□□

① □□□□□□□□□□□□□□□□□□□□ 0□□□

□□□□□□□□□□□□□□ 0 □ 9

□□□□ ± □□□□□□□ □□□□□□□□

CLR □□□□□□□ □□□□□□□

SETUP□□□□□□□□□□□□□ P1□P5□□□□□□□□

```
① Setup Channel 01                        P1
② MOTOR :ENA  HOLD OFF:ENA PULSE MODE: P-P
③ CW.LS :ENA N.O □  DG.LS:ENA  1234567890□
④ CCW.LS:ENA N.O _  DG.LS:ENA -1234567890_
```

□□□□□□□□□□ ON □□　　□□□□□□ □□□□□□□□ ON □□

□□□□□□□□□□ OFF □□　　□□□□□□ □□□□□□□□ OFF □□

□□	□□	□□
②□□□□□□□□□□□□/□□	ENA/DIS	CHG □□□□□□□□
②□□□□□□□HOLD/OFF □□/□□ □1	ENA/DIS	CHG □□□□□□□□
②PULSE MODE	P-P□ PULSE−PULSE □□□□ P-D□ PULSE-DIRECTION□□□□ PDR: P-D□□□□□ PULSE-DIRECTION□□□□□□□ DIRECTION□□□□□□□□□P-D□□□□□□ □□□□□□□□(2009□1□ □□□□□□□□	CHG □□□□□□□□
③CW LS□□□/□□	ENA/DIS	CHG □□□□□□□□
③CW LS□□□□□□□	N.O/N.C NO□Normaly Open NC□Normaly Close	CHG □□□□□□□□
③CW□□CCW□□□□□□□□□□□□□□□□		

□□□/□□ □2	ENA/DIS	CHG □□□□□□
③CW□□□□□□□□□□□	MAX	□□□□□□
□□□	±2,147,483,647	
④CCW LS□□□/□□	ENA/DIS	CHG □□□□□□
④CCW LS□□□□□□□	N.O/N.C	CHG □□□□□□
④CW□□CCW□□□□□□□□□□		
□□□/□□ □2	ENA/DIS	CHG □□□□□□
④□CW□□□□□□□□□□	MAX	□□□□□□
□□□	±2,147,483,647	

□ □□□□□□□□□□□□ □ □□ □□□ □ □ □ □ □ □ □□ □ □ □□ □ □ □"ENA"□ □ □ □
□□□□□□□ □ ON□□ □□□ □ □ □ □ □□□ □

□ 2□□□□□□□□□□□□ □ □/□ □ □ □ □ □□□ □ □ □□□□ □ □ □□ □ □ □ □□ □□□ □
□□ □□□□ □ □ □ □ □ □ □ □□□ □□

□□□ □□ □□□□□ □

□□□□ □□ □ □ □ □ □ □ □□ □ 0□ □□

①②③④

① Setup Channel 01		P2
② HSPD(pps) 0003700	ACC:Trape	stopmode
③ MSPD(pps) 0003700	JOG: 0001	L.S:SLOW
④ LSPD(pps) 0003700	Rate: 013	P.B:SLOW

□□	□□	□□
②HSPD□□ □ □□□□ □ □ □□ pulse/s	0□ 9,999,999	□ □ □ □ □□□ □□□ □
②□□□□□□□□	Const□□ □ □□□□□ Trape□□ □ □□□□□ Schar□S□ □□□□□	CHG □□□ □□□ □ □ □ □ □ □□□□□□□□
③MSPD□□ □ □□□□ □ □	0□ 9,999,999	□ □ □ □ □□□ □□□ □
③JOG□ □ □□□□	0□ 9,999	JOG□ □ □ □□ 1□□□□ □ □ □ □□□□□□
③□□□□□□□ □□ □□□□□□□ □	SLOW(Slow□□□ EM□Emergency□□□ □□□□	CHG □□□ □□□ □ □ □□□ □ □□□□□□□
④LSPD□□ □ □□□□ □ □	0□ 9,999,999	□ □ □ □ □□□ □□□ □
④□□□Rate□□□	0□ (MAX) 115	□ □ □ □ □□□ □□□ □

*[illegible] Rate [illegible] (P25) [illegible]		
④ [illegible] [illegible]	SLOW(Slow[illegible]) EM(Emergency[illegible]) [illegible]	CHG [illegible] [illegible]

[illegible] P3 (REL,ABS,SCAN[illegible])

① [illegible] 0 [illegible]

```
① Setup Channel 01                P3
② REL   DATA;  1234567890
③ ABS   DATA;-1234567890
④ SCAN  DATA;-1234567890
```

[illegible]	[illegible]	[illegible]
② REL[illegible]	[illegible] ±2,147,483,647	[illegible]
[illegible]		
③ ABS[illegible]	[illegible] ±2,147,483,647	[illegible]
[illegible]		
④ ACAN[illegible]	[illegible] ±2,147,483,647	[illegible]
SCAN[illegible] PRESET [illegible]		

[illegible] .2 [illegible] ④ [illegible]

4.4 P4 [illegible]

[illegible]

① [illegible] 0 [illegible]

[illegible] □

[illegible]

```
① Setup Channel 01                     P4
② H.P LS    :ENA     CONTACT  : N.O  _     *
③ ORG.START:CCW      OFFSET.P:0100         *
④ ORG.MEM   :(CCW)   MEM.POS  : NO H.P     *
```

[illegible]

[illegible]

```
④ ORG.MEM   :(CCW)   MEM.POS  : 0500000000  *
```

[illegible] 500,000,000

[illegible]	[illegible]	[illegible]
② [illegible]	ENA/DIS	CHG [illegible]
[illegible] / [illegible]		
② [illegible]	N.O/N.C	CHG [illegible]
[illegible]	Normaly Open / Normaly Close	
③ [illegible]	CW/CCW	CHG [illegible]
③ [illegible]	9999	[illegible]
④ [illegible]	CW/CCW	[illegible]
④ [illegible]	[illegible] ±2,147,483,647	[illegible] "NO H.P" [illegible] CHG [illegible] CHG [illegible] "NO H.P” [illegible]

□□□ P5 □Timing Out □□

□□□□□□ □□□□□□□□□ □ 0□ □□

```
① Setup Channel 01          MODE;PULSE 200ns
②   START; 0123456789       STOP; 0123456789
③   PULSE INTERVAL(PULSE MODE); 0123456789
④ BACKLASH DATA       ;<  0100  >          *
```

□ □□□□□ Timing Out □□□□□ □□□□□ □ □□□ □

□□	□□	□□
① Timing Out□ □ □□□□ □ □ □□ □ □□	DIS GATE PULSE 200ns PULSE 10us PULSE 100us PULSE 1ms	Timing Out□ □ □ □ Timing Out GATE□ □ START/STOP□ □ □ Timing Out □□□□□□□ □ Pulse Interval□ □ □ □ □ □□□□ □ □ □ □ □ 200ns>>10us >>100us>>1ms CHG □□□ □□□ □ □
② Timing Out □□□□□□□ □ □ □ □ □ START□STOP□ □ □ □ □	□□ ±2,147,483,647	□ □ □□□ □
③ Timing Out □□□□□□□ □ □□□□ □ □□ □ □ □□□	□□ 2,147,483,647	□ □ □□□ □
④ □□□□□□□□ □ □□□		□□□□□□□ □□□ □ □□ □ □□□□□□□ □ □ □□□□□ □ □ □□□ □

Timing Out□ □ □ □ □□□ Timing Out □□□□ □ □ □□ □□□ □ □ □ □□□ □□ □□

□□□ P6 □RS-232C□ □ □ □ □ □ □

```
① RS-232C SET-UP                          P6
②  □BAUD RATE       9600  □STOP BIT     <1>
③  □DATA BIT         <8>  □FLOW CONT   <NO>
④  □PARITY          <NO>
```

□ □	□ □	□ □
② RS-232C□ □ □ □ □ □ □ □□□□□ bps□ □ □ □ < >□ □ □□□□ □ □ □ □□□ □ □	1200 >> 2400 >> 4800 >> 9600 >> 19200 >> 38400 >> 1200	CHG □□□ □□□ □ □

□□□ P7 □GP-IB□ □ ADDRESS□ □ □

①	GP-IB SET-UP P7
②	□DELIMITER :<CR/LF> + <EOI> *
③	□GP-IB ADDRESS :07 *
④	

□ □	□ □	□ □
③ GP-IB SDDRESS □ □ □ < >□ □ □□□□ □ □ □ □□□ □ □	□ □ 31 □ □ □ □	□□ □ □ □ □ □ □ 0 □ 9 □ □ □ □ ± □ □□□ □ □ □□□□□□ CLR □ □□□ □ □ □ □□□□ □

□□□ P8 □LCD□ □ □□□□□□□□ □ □□□□□□ □□ □

①	LCD BRIGHTNESS SET-UP P8
②	□LCD BRIGHTNESS 50 *
③	HAND BOX CONTROL 04TYPE *
④	PROGRAM CHANGE NEW Ver:<1.5B> *

□ □	□ □	□ □
② LCD□□□□□□ □ □	□ □ □□□ □ □ □ □	□□ □ □ □ □ □ □ 0 □ 9
③ □□□□□□□□□□□□□ □□□□ □	□□TYP / □□TYPE	CHG □□□ □□□ □ □ □ □ □ □ 5.4□□□□□□□□□□□□ □ □ □ □□ □□
④ PM16C-04X□ □□□□□ □ □	NEW / OLD	CHG □□□ □□□ □ □ □ □ □ □□ □ □□ □ □□ □ □ □ □ □ □ □ □ □ □ □□

□□□ P9 □LAN□□ IP ADDRESS,PORT NO. □□□

```
① LAN CONNECTION SETTING                      P9
②  □MAC ADDRESS          <1A_2B_3C_4D_5E_6E>
③  □IP ADDRESS               192.168.001.099
④  □PORT NO.                 10001
```

□□	□□	□□
② MAC ADDRESS□□□□□	12□□□□	□PM16C□□□□□□□LAN□□ □□□□□□ MAC ADDRESS□□□ □□□□□□
③ IP ADDRESS□□□	3□ 4□□□□□□□	□□□□□□□□□□□□□□□□□□□ □□IP ADDRESS□□□□□□□
④ PORT NO□□□ □□	MAX □□□□□	□□□□□□□□PORT NO□ □□□□□□

□□ □□□□

□□□□□□□□□□□□□□□□

□□□ □□□□□□□□

□□□□ H,M,L□□□□□□□□□□□□□□□□□□□□□□□□□□□□□□□□□□□□□□□

□□□□□□□□□ "Const□□□□□□□□□"□□□

□□□□□□□□□□□□□□□

□□□□□□□□□□□□□□□□□□

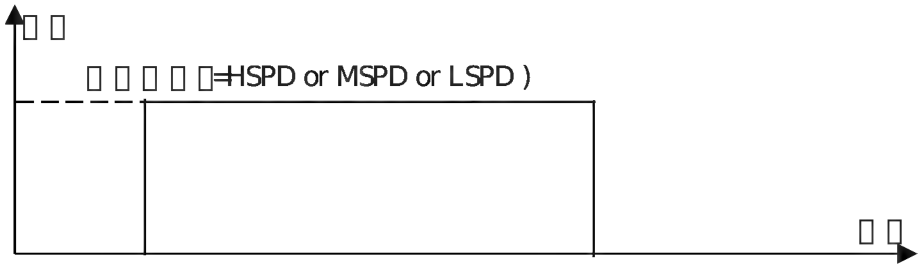

□□□□□□□□□ "Trape□□□□□□□□□□”□□□

LSPD□□□□□□□□□□□□□

LSPD□□□□□□□□□□□□□□□□□□□□□□□□□□□□□□□□□□□□□□□

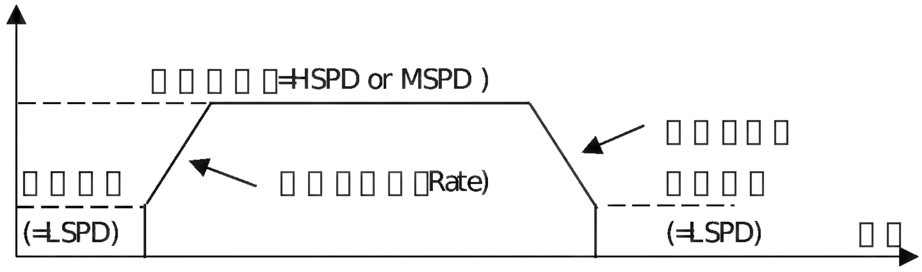

□□□□□□□□□ "Schar(□□□□□□□□□□)"□□□

LSPD□□□□□□□□□□□□□

LSPD□□□□□□□□□□□□□□□□□□□□□□□□□□□□□□□□□□□□□□□

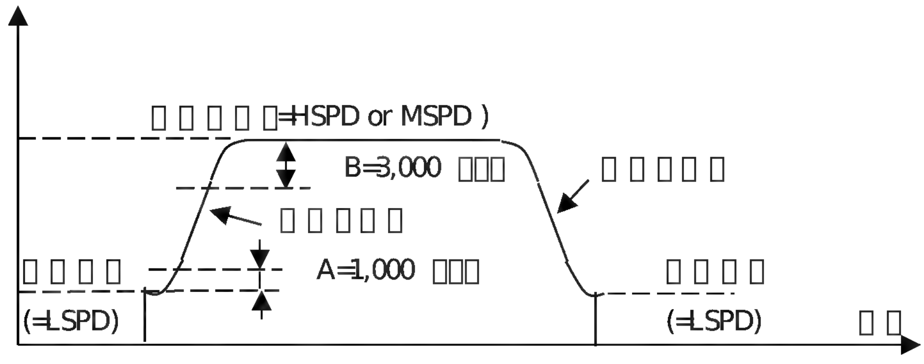

□□□□ A=1,000pps□B=3,000□□□ □□□□□□□□□

HSPD <= LSPD +4,000□□□ □□□□□□□□□□□□□□□□□□□□□□□□□□

□□□ PM16C-04XD □□□□□□□

PM16C-04X□□□□□□□□□□□□□□□□□□(FFFFFFFF)□□□□□□□□

□□□□□□□□□□□□□□□□□ □ ±2,147,483,647 □□□□□□□□□□□□□□□□□

□□□□ □□□□□□

□□□□□□□□□□□□□□□□□□□□□□□□□□□□□□

□□□□□□ □□□□□□□□□□□□□□□□□

① □□□□□□□□□□□□□ □ □ ±□□,□□□,□□9 □□□□□

□□□ □□ + □□ □□□

+100,000□□□□□ -99,999,999□□□□□ +99,999,999□□□□□

```
*CH01*    |*CH02*    |*CH03*    | CH03     |
□00100000|−99999999|□99999999|−11100000|
←←  H     |     M  →→|     L  →→|     M    |
 00111111|  10000000|-5111111K|  10000000|
```

② □□□□□□□□□□□□□ □ □ ±□□,□□□,□□9 □□□□□□□□

□□□□□□□□□□□□□□□□2□□□□□□□□□□□□□

□□□□□□ □□ + □□ □□□□

□□□□□□ □□□□

□□□ +2,147,483,647 □□□□□　　□□□ -2,147,483,647 □□□□□

+100,000,000□□□□□　　-1,000,000,000□□□□□

```
*CH01* □2|*CH02* □0|*CH03* −1|*CH03* −2|
147483647|100000000|000000000|147483647|
←←  H     |     M  →→|     L  →→|     M    |
 00111111|  10000000|-5111111K|  10000000|
```

③ □□□□□□□□□□□□□

32□□□□□□□□□□□□□□□□□□□□□□□□□□□□□□

SETUP□□　P1 CW Digital Limit SW □□□□□

P1 CCW Digital Limit SW □□□□□

P3 REL□□□□□ □□□□□

P3 ABS□□□□□ □□□□□

P3 SCAN□□□□□ □□□□□

P4 □□□□□□□□ □□□□□

P5 Timing Out □□ START□□□□□

P5 Timing Out [illegible] STOP[illegible]

P5 Timing Out [illegible] Interval[illegible]

[illegible] ±2,147,483,647 [illegible]

[illegible]

[illegible]

[illegible]

[illegible] ± [illegible]

[illegible]

[illegible]

Setup Channel 01		P3
REL DATA;	0250000000	
ABS DATA;	-1234567890	
SCAN DATA;	-1234567890	

[illegible] REL [illegible] 0,250,000,000 [illegible]

[illegible] 2,500,000,000 [illegible]

[illegible] 0[illegible]500,000,000 [illegible]

Setup Channel 01		P3
REL DATA;	0500000000	
ABS DATA;	-1234567890	
SCAN DATA;	-1234567890	

[illegible] Timing Out [illegible]

[illegible] CH [illegible] (Timing Mode)

Timing Out [illegible] (1)[illegible] (2)[illegible]

Timing Out [illegible] / [illegible]

[illegible] SETUP [illegible]

[illegible]

[illegible]

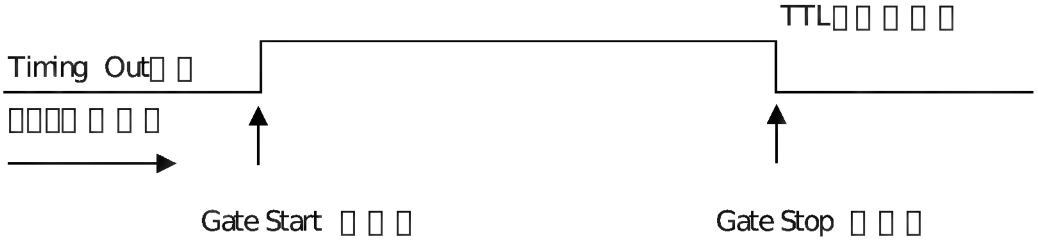

[illegible] CHG [illegible] Timing Ready(#CH05#[illegible] Start [illegible] Stop [illegible]

[illegible] ”[illegible]” [illegible] Start[illegible]Stop [illegible]

[illegible]

[illegible] CHG [illegible] Timig Ready [illegible]

[illegible] (#CH05#→ _CH05_→ *CH05* [illegible]

[illegible] Gate Start [illegible] =Gate Stop [illegible]

[illegible]

[illegible]

[illegible]

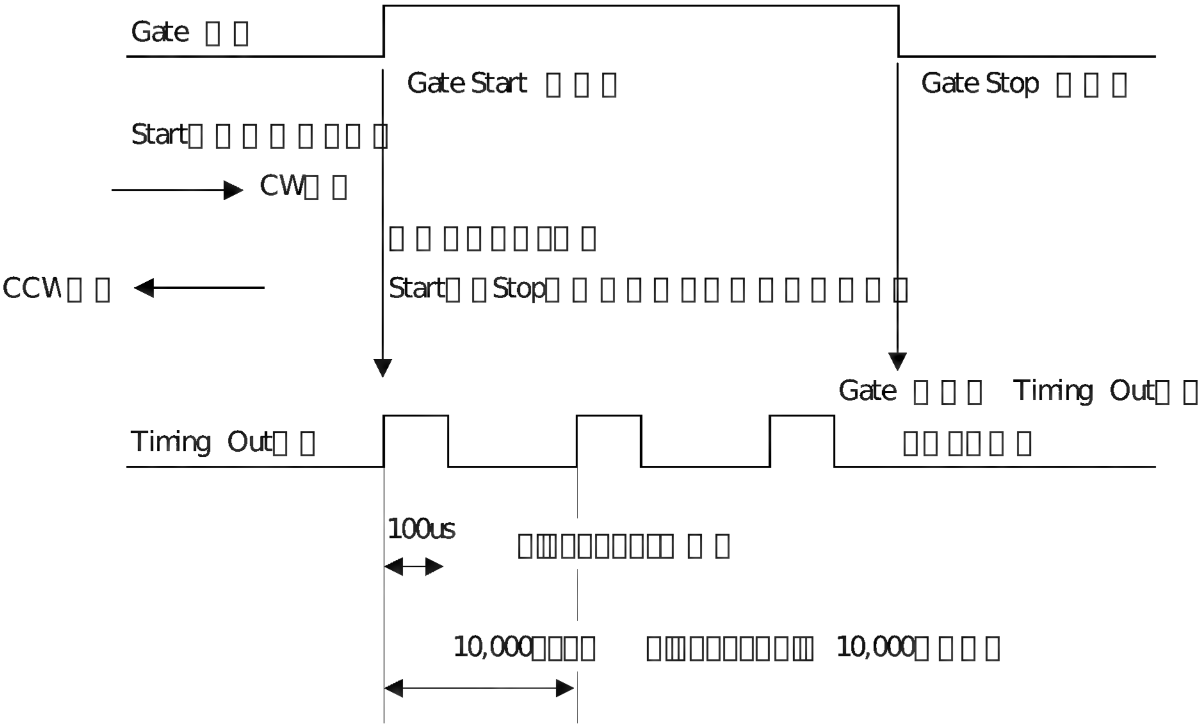

[illegible] Gate Start [illegible] 1 [illegible]

[illegible] Start [illegible] CHG [illegible] Ready [illegible] #CH05# [illegible])

[illegible]

CCW [illegible] Stop [illegible] Start [illegible]

[illegible] Start [illegible] CHG [illegible] Timing out Ready

[illegible]

[illegible] CHG [illegible] Timing Out Ready [illegible]

[illegible] Start [illegible]

[illegible]

([illegible]

[illegible] Timing Out [illegible] LCD [illegible] READY

[illegible] #CH5# [illegible]

[illegible] *CH5* [illegible]

[illegible] STOP [illegible]

[illegible]

CHG

#CH5# >> _CH5_ >> *CH5*

TMGC

MODE

MODE

SCAN PRESET

REL START]

ABS START]

HOME NO H.P

H P

CH01	*CH02* -0	*CH03* +2	CH03
00100000	900000000	100000000	-98000000
←← H	M →→	L →→	M
NO H.P	2147483K	-2147483K	3000000K

H.P

+2,147,483,647

-2,147,483,647

H.P 3,000,000,000

±

0 ±88,888,888

± × K

−

±

SETUP

[illegible]

[illegible]TYPE [illegible]

① [illegible]

[illegible]

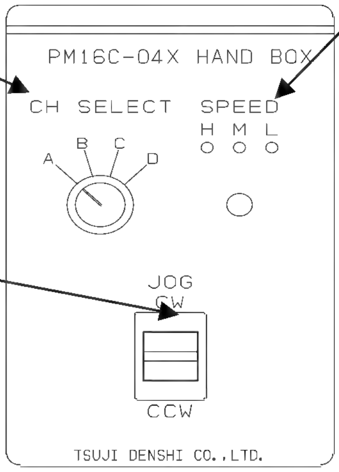

③ JOG[illegible]

② [illegible]

[illegible]

① [illegible]

② [illegible]

③ JOG[illegible] CW,CCW[illegible]

[illegible]

[illegible] JOG[illegible]

[illegible]

[illegible]2TYPE [illegible] PM16-HDX2 2[illegible]

[illegible]TYPE[illegible] CHA,CHB[illegible] 2[illegible]

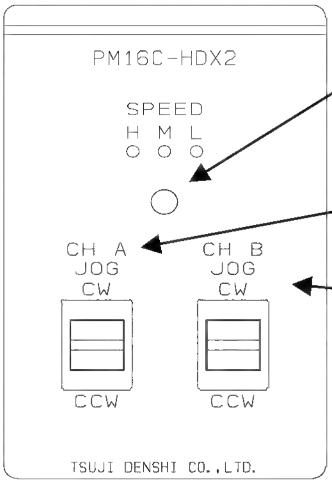

① [illegible]

H,M,L[illegible]

② CHA:JOG[illegible]

CHA[illegible]

③ CHB:JOG[illegible]

CHB[illegible]

[illegible]16TYPE [illegible] PM16C-HDX[illegible]

[illegible]TYPE[illegible]

[illegible]

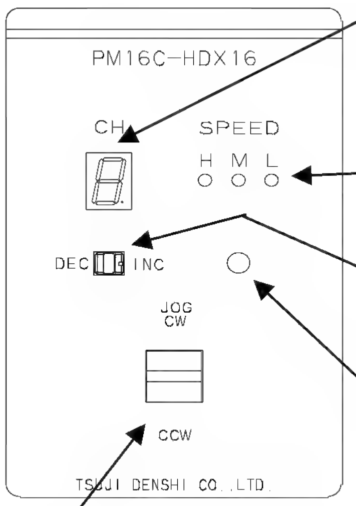

① [illegible] LED

[illegible] F(15 [illegible] 7 [illegible] 0 [illegible] F [illegible]

② [illegible]

[illegible] LED [illegible]

③ [illegible]

INC [illegible] → [illegible] → [illegible] → [illegible]

DEC [illegible] → A → [illegible]

④ [illegible] ([illegible]

[illegible] H→M→L→H [illegible]

⑤ JOG [illegible]

CW,CCW [illegible] CW,CCW [illegible] JOG [illegible]

([illegible] 3 [illegible] H,M,L [illegible]

[illegible] STOP [illegible]

[illegible] 3 [illegible]

[illegible] H.P [illegible]

H.P [illegible]

[illegible]

[illegible]

H.P [illegible]

[illegible]

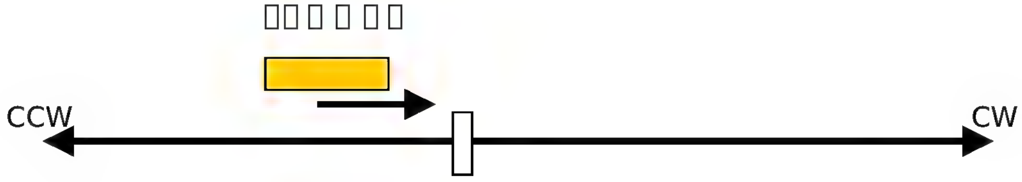

[illegible] [[illegible]]

[illegible]

[illegible] CW [illegible]

[illegible]

[illegible]

[illegible]

□□□ □□□□□□□

□□□□□□□□□□□□□□□□□□□□□□□□□□□□□□□□□□□□□□□

□□□□□

□□	□□□□□□	□□□□	□□	□□	□□
□□□	□□□□□□□ □□□□□□ □	□□□□	JOG CW□CCW □□□ START +JOG CW,CCW □□□□□□□	△	□
□□□		□□□□□	START□□□□□ □□ □□ON	◎	□
□□□	□□□□□□ □□□□□□ □□□□□□□ □□□	□□□□□	START□□□□□ ON	◎	□□

[□□ □]

1. □□□□□□□□□□□□□□□□□□

□□ □□□□□□□□CW□□□□□□□□□□□□□□□□□□□□□□□□□ □□□□□□□□□□□□CCW□□□CW□□□□□□□□□H.P□□□□□□□ □□□□□□□□□□□□□□□□□□□□□JOG CW □□□ START +JOG CW □□□□□□□□□□□□

□□□□□□□□□□□□□□□□□□□□□□□□□□□□□□□□□□□□ □□□□□□□□□□□□LCD□□□□□□H.P□□□□□□□□□□□□□□□□□ □□□□□□□□□□□□□□4.4 SETUP□□ □□□□□□□ORG.MEM□ □ □CW)□□□□□□□□□□

[□□ □]

1. □□□□□□□□□□□□□□□□□□

□□ □□□□□□□□□□□□□CW□□□□□□□□□□□□□□□□□□□□□□ □□□□□□□□□□□□□□□□□□□□□□□4.4 SETUP□□ □□□□□□□ ORG.START □□□ CCW □□□□□□□□□□□□□□□□START□□□□□□□ □□ON□□□□□□□□□□□□□□□□□□□□□□□□□□□□□□□□□

□□□□□□□□□□□□□□□□□□□□□ □□□□□□□□

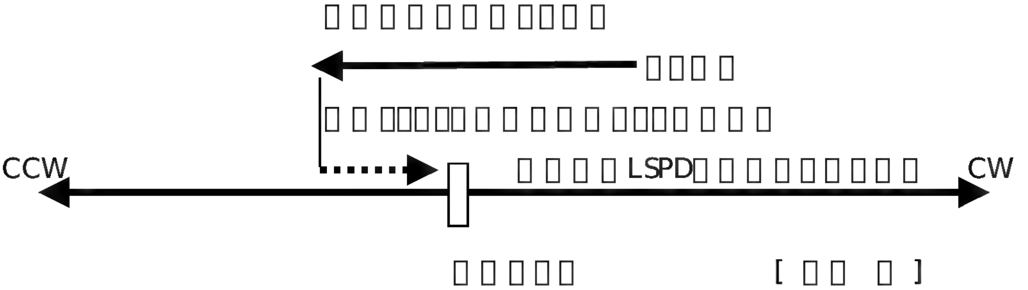

[illegible]

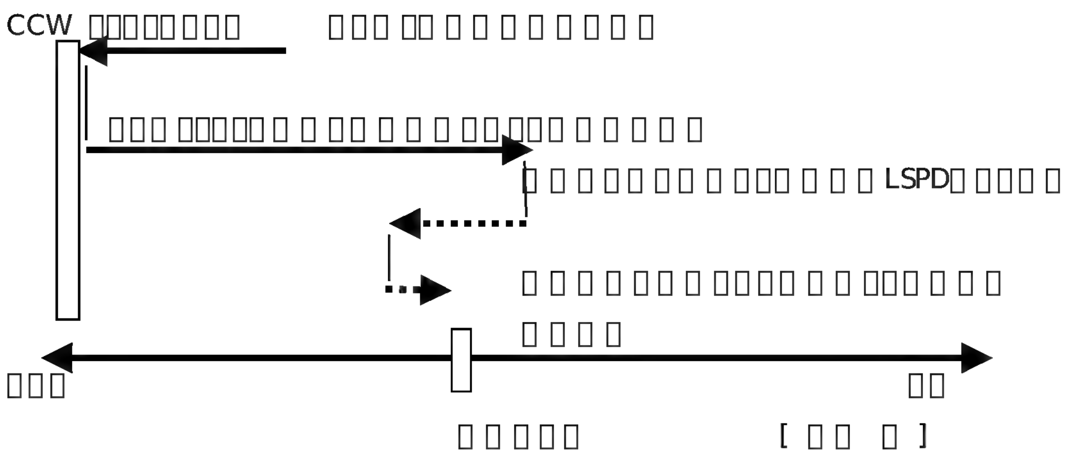

[illegible]

[illegible] LCD [illegible] H.P [illegible]
[illegible] 4.4 SETUP [illegible] ORG.MEM [illegible]
[illegible] CW) [illegible]

[illegible] STOP [illegible]

[illegible]

[[illegible]]

1. [illegible]

[illegible] H.P [illegible]

2.START [illegible] ± [illegible] 4.4 SETUP [illegible] OFFSET.P [illegible]

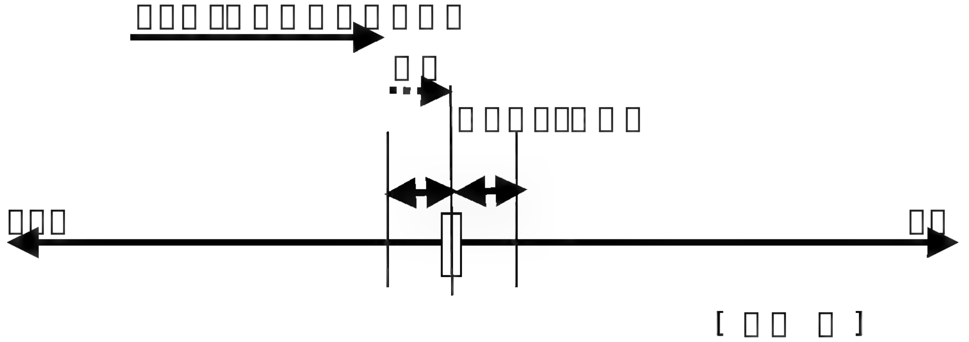

[[illegible]]

[illegible]

[illegible]

[illegible] STOP [illegible] ON

[illegible] H.P [illegible]

NO. H.P [illegible]

[illegible] H.P [illegible]

[illegible] 4.4 SETUP [illegible] MEM.POS [illegible]

CHG [illegible]

[illegible] [illegible]

[illegible] [illegible]

④RS-232C[illegible]

⑦CH0 [illegible]

⑤LAN[illegible]

⑧CH0 [illegible]

⑥[illegible]

[illegible]A

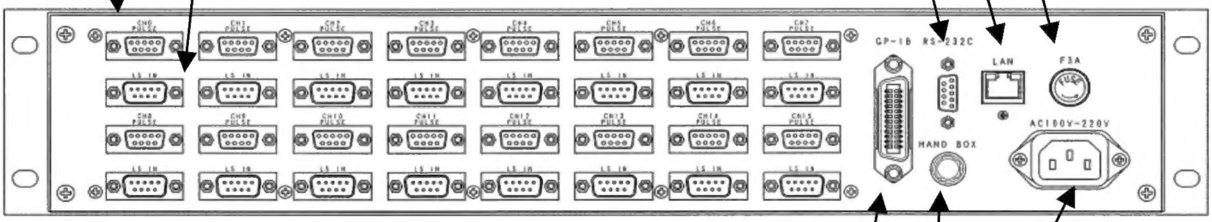

①[illegible]

②[illegible]

③GP-IB[illegible]

CH0[illegible]CH15[illegible]

６．２　外部機器との接続

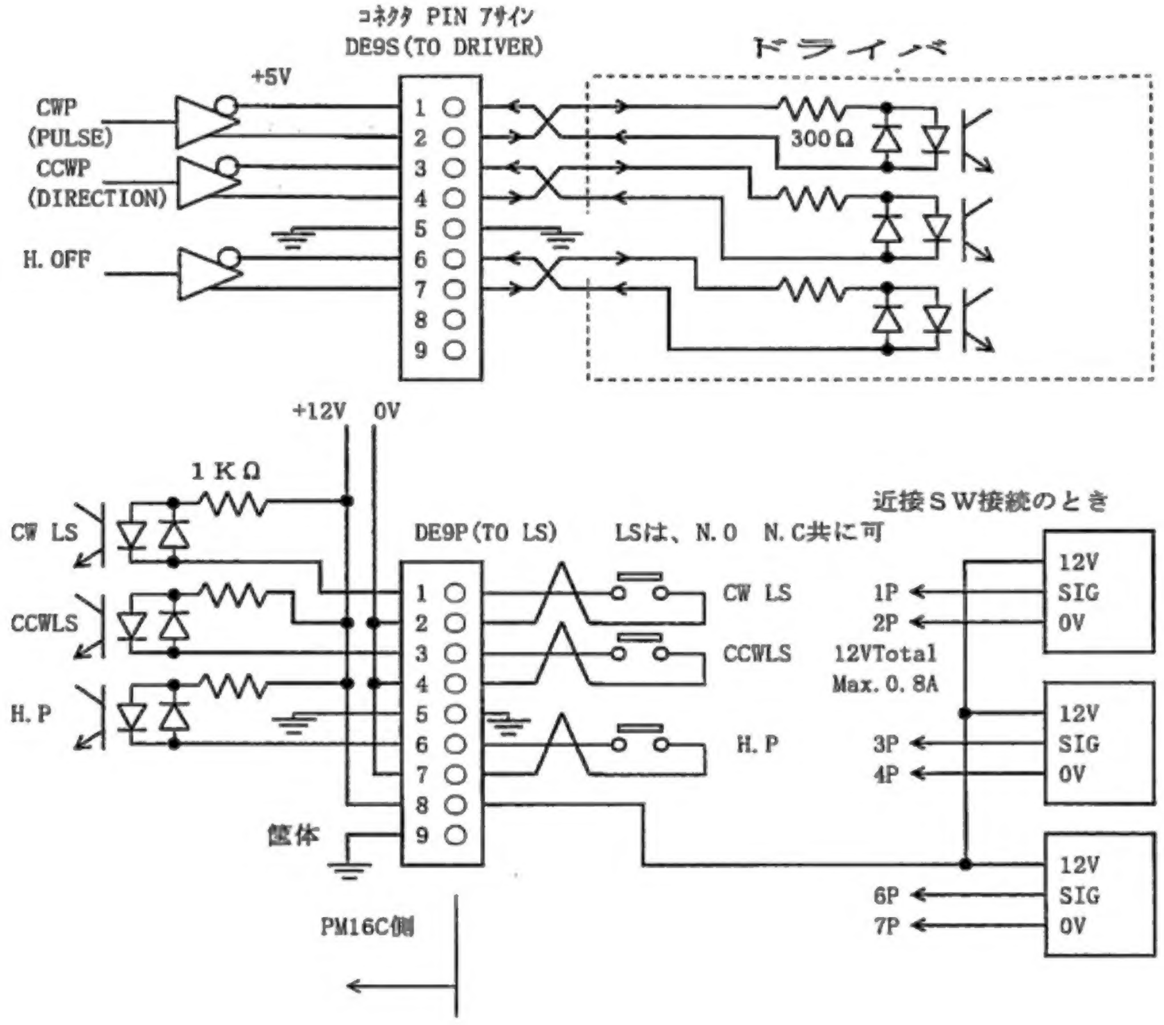

注）DE9P, 9S へ接続するｺﾈｸﾀのｼｪﾙは、ﾒｰｶによってｻｲｽﾞが違います。
外形が、35W 以下のものをお選びください。
JAE の DE-C1-J6, OMRON の XM2S-0911, ﾋﾛｾ の HDE-CTF をおすすめします。

□□ □□□□□ □□□ Rate □□□□

□□□Rate □ □□ □□□ □□□□□ □□ □□□□□□□□□ □□ □□ □□□□□□□
□□□□□□□□□□□□ □□□ □□/□□□□□□□

Rate Data Table □ □□□□: ms/1000pps □

NO	RATE	NO	RATE	NO	RATE	NO	RATE	NO	RATE	NO	RATE
0	1000	20	150	40	22	60	3.3	80	0.47	100	0.068
1	910	21	130	41	20	61	3.0	81	0.43	101	0.062
2	820	22	120	42	18	62	2.7	82	0.39	102	0.056
3	750	23	110	43	16	63	2.4	83	0.36	103	0.051
4	680	24	100	44	15	64	2.2	84	0.33	104	0.047
5	620	25	91	45	13	65	2.0	85	0.30	105	0.043
6	560	26	82	46	12	66	1.8	86	0.27	106	0.039
7	510	27	75	47	11	67	1.6	87	0.24	107	0.036
8	470	28	68	48	10	68	1.5	88	0.22	108	0.033
9	430	29	62	49	9.1	69	1.3	89	0.20	109	0.030
10	390	30	56	50	8.2	70	1.2	90	0.18	110	0.027
11	360	31	51	51	7.5	71	1.1	91	0.16	111	0.024
12	330	32	47	52	6.8	72	1.0	92	0.15	112	0.022
13	300	33	43	53	6.2	73	0.91	93	0.13	113	0.020
14	270	34	39	54	5.6	74	0.82	94	0.12	114	0.018
15	240	35	36	55	5.1	75	0.75	95	0.11	115	0.016
16	220	36	33	56	4.7	76	0.68	96	0.10		
17	200	37	30	57	4.3	77	0.62	97	0.091		
18	180	38	27	58	3.9	78	0.56	98	0.082		
19	160	39	24	59	3.6	79	0.51	99	0.075		

[illegible]

[illegible]	AC 85V [illegible] 264V 47 - 440Hz 50VA	
[illegible]	[illegible]	[illegible]
	[illegible]	[illegible]
	[illegible]	[illegible] CW, CCW, HOLD OFF [illegible] 5V 8mA([illegible])
	[illegible]	[illegible]
	[illegible]	[illegible] ± [illegible]
	[illegible]	1048.56[illegible] 0.0125 ms/KHz
	[illegible]	[illegible]
	[illegible]	[illegible]
	[illegible]	DE9S(F)/PM16C-04XD, RJ-4/PM16C-04XR
	[illegible]SW[illegible]	[illegible] CW-LS, CCW-LS, HOME-LS 12V 5mA(-[illegible]) [illegible] +12V[illegible] (MAX 1A)
	[illegible]	DE9P(M)/PM16C-04XD, RJ-4/PM16C-04XR
40[illegible]4[illegible] LCD[illegible]	[illegible]	[illegible] ± [illegible]SW[illegible] [illegible] [illegible] ready/not ready[illegible]
	[illegible]	[illegible]SW[illegible] HSPD, MSPD, LSPD[illegible] LS[illegible]PB[illegible] RS232C[illegible] GP-IB[illegible] HANDBOX[illegible] FIRMWARE[illegible]
[illegible]		JOG CW/CCW, PRESET, START, STOP, REM/LOC, SETUP, MODE SEL[illegible] REM/LOC, SETUP, HP/REL/ABS/SCAN[illegible]
[illegible]		[illegible] ready/not ready[illegible] [illegible] H, M, L[illegible] H, M, L[illegible]
[illegible]	PRESET	ready ch[illegible]
	START	ready ch[illegible]
	STOP	ready ch[illegible]
	JOG	ready ch[illegible] JOG[illegible]
[illegible]	SCAN MODE	ready ch[illegible] JOG SW[illegible]
	ABS IDX MODE	ready ch[illegible]
	REL IDX MODE	ready ch[illegible]
	HP STOP MODE	HOME POSITION LS [illegible] [illegible] [illegible]
[illegible]	LAN, GP-IB, RS232C [illegible]	
[illegible]	EIA 2 UNIT [illegible] (88H× 482W× 325D)	

[illegible]

[illegible]
[illegible]300-0013 [illegible] 3739
TEL 029-832-3031([illegible]) FAX 029-832-2662
E-mail : info2@tsuji-denshi.co.jp